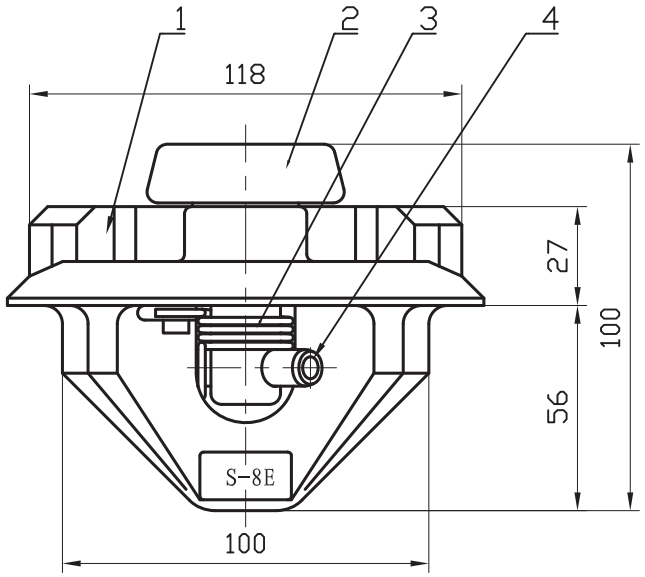

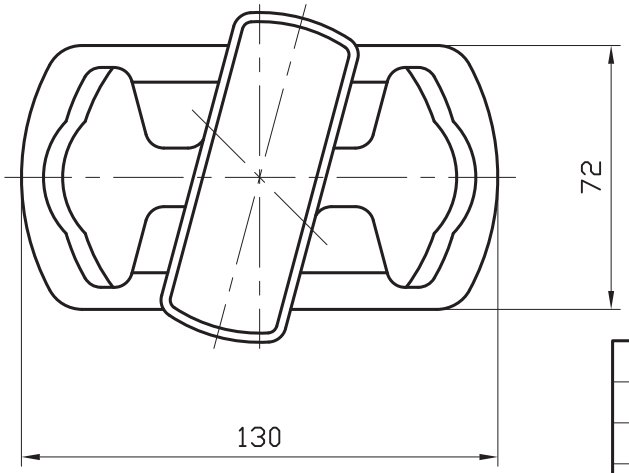

4	SPRING PIN	1	1Cr18Ni9		
3	SPRING	1	1Cr18Ni9		
2	WING	1	ZG270-500		
1	BODY	1	ZG270-500		
ITEM	NAME OF PARTS	QTY	MATERIALS	WEIGHT(kg)	REMARKS

STRENGTH:

	S.W.L	P.L	B.L
(Shear)	21Ton	31.5Ton	42Ton

FINISH: HOT DIP GALVANIZED.

WEIGHT: 2.2kg

Description	SELF-HANGING STACKER				
Date 28/8/2011	Drawn by Q.N.Zhai	Checked by G.H.Yuan	Scale 2:1	Edition No. S	Page 1/1

Sclashing Shanghai Co.,Ltd.
Tel:86-21-62324652 E-mail:info@sclashing.com

Model No. S-8E